SAUTER

Mischhahn und Antrieb
Robinet mélangeur et servomoteur
Mixing cock and actuator
Valvola e servomotore
Válvula de sector y servomotor
Blandningsventil och drivning
Mengkraan en servomotor

MV 505477

Montagevorschrift
Instructions de montage
Fitting instructions
Istruzioni di montaggio
Instrucciones de montaje
Monteringsanvisning
Montagevoorschrift

M Y02178 **ASM124(S) MH 32 . .**

M Y06538 **ASM124(S) MH 42 . .**

1

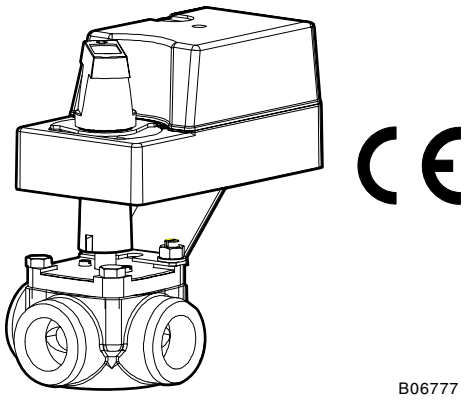

2

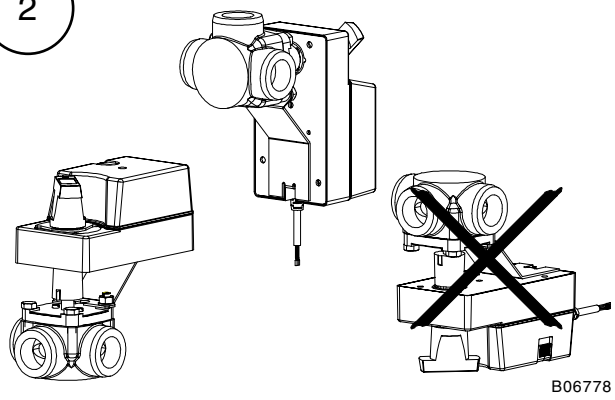

3.1

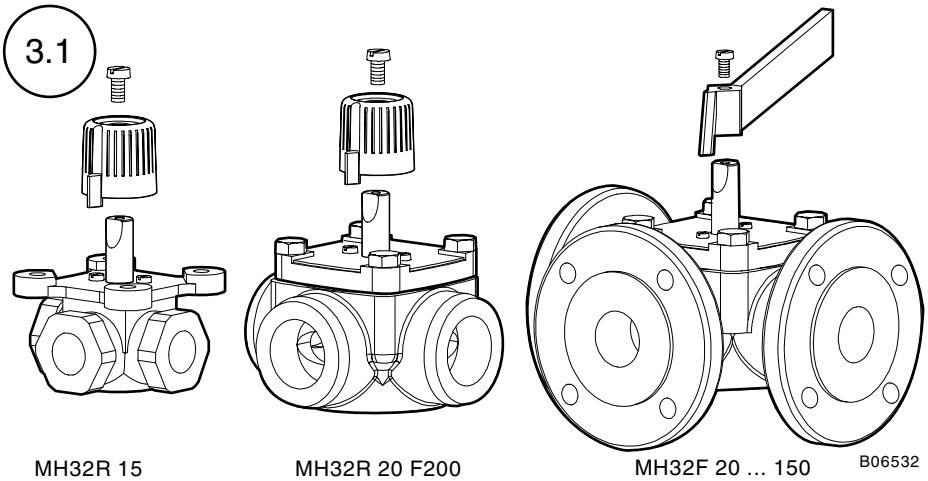

MH32R 15
MH32R 20 F210
MH42R 15
MH42R 20 F210

MH32R 20 F200
MH32R 25 ... 50
MH42R 20 F200
MH42R 25 ... 40

MH32F 20 ... 150

MH42F 32 ... 50

3.2

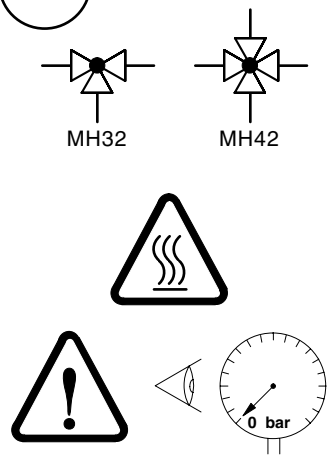

4

MH32

Var. A

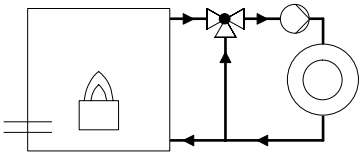

Var. C

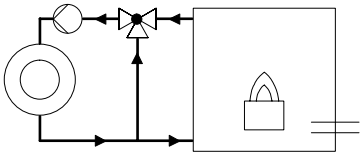

Var. B

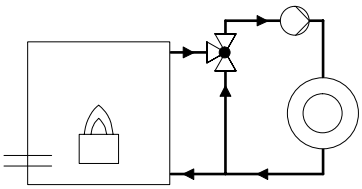

Var. D

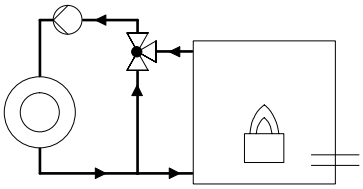

MH42

Var. E

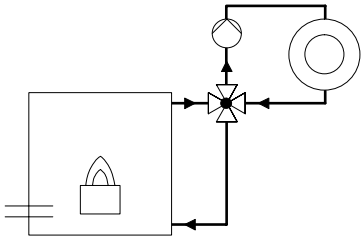

Var. F

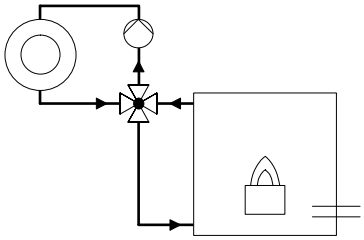

B06533

5

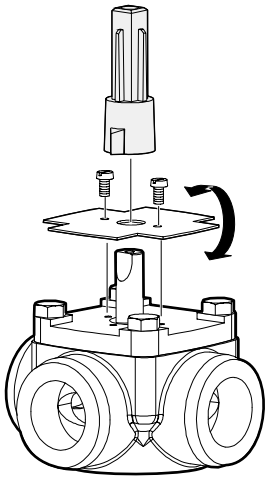

MH32

Var. A

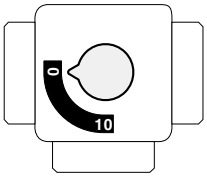

Var. C

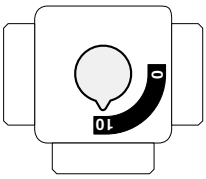

Var. B

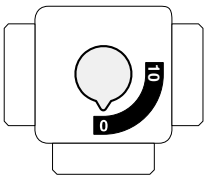

Var. D

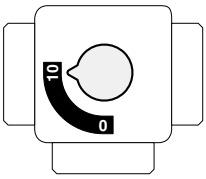

MH42

Var. E

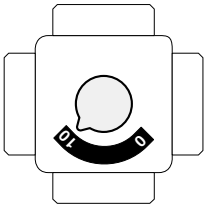

Var. F

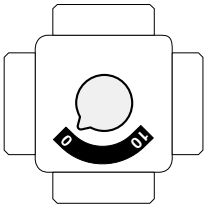

B06779

6

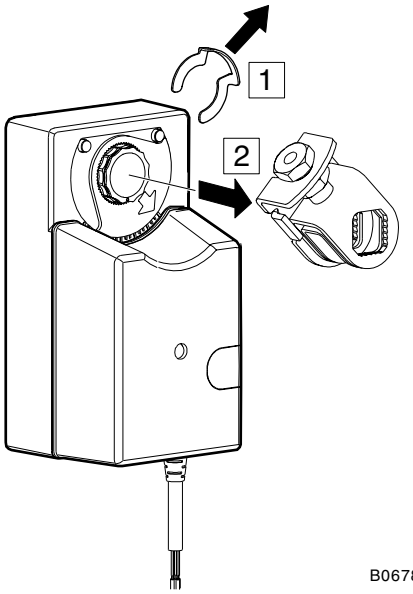

B06780

7

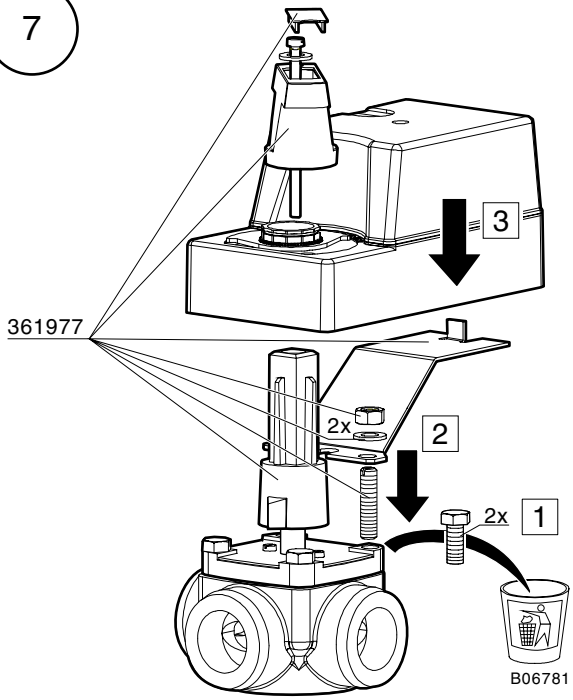

B06781

8

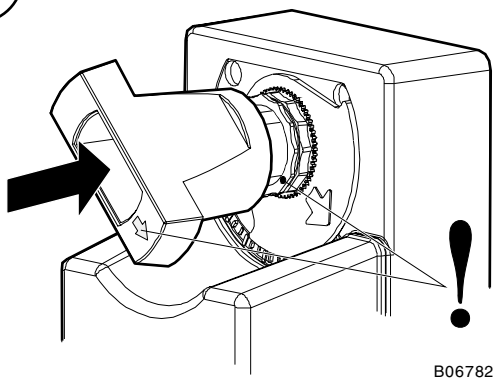

B06782

9

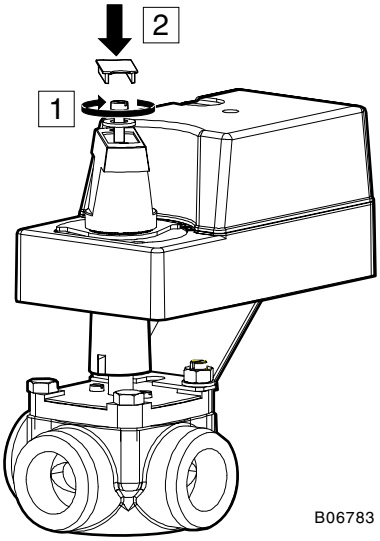

B06783

© Fr. Sauter AG CH-4016 Basel (Schweiz)
Tel. +41 61 - 695 55 55 Fax +41 61 - 695 55 10
http://www.sauter-controls.com
e-mail: info@sauter-controls.com
505477033 R10
Printed in Switzerland